SHIZUKI

CERTIFICATION INTERNATIONAL SOCOTEC

ISO 14001

UKAS MANAGEMENT SYSTEMS 0063

CERTIFIED JQA MANAGEMENT SYSTEM ISO 9001

JQA-QMA13383

TPCR-A

LOW VOLTAGE POWER CAPACITOR

TYPE RG-2 (INDOOR USE)

APPLIED STANDARD

The capacitors are designed, manufactured, and tested to meet the requirements of IEC Publication No. 60831-1, JIS C 4901

OPERATING CONDITIONS

1. Installation :	Indoor
2. Ambient temperature :	-25°C to +50°C (Class C)
3. Altitude :	Not exceeding 2000 meters above sea level

TYPE AND RATINGS

1. Type :	RG-2
2. Rated voltage :	See the tables showed on page 3, 4, 5
3. Rated output in kvar :	See the tables showed on page 3, 4, 5
4. Rated frequency :	50Hz (60Hz is also available upon request).
5. Phase and connection :	Three (3) phase and delta. (Single phase unit is also available upon request).

DESIGN AND CONSTRUCTION

Element :	Metallized polypropylene film and self-healing type.
Impregnation :	Less-flammable liquid insulation, non-PCB oil, non-toxic and environmentally compatible.
Designation :	Suit for mounting in vertical position with bushings on top.
Container :	Galvanized steel sheet.
Color :	Non-corrosive poly-urethane resin enamel Munsell notation 5Y7/1

WARRANTY

The company warrants these capacitors against defects in material and workmanship for one (1) full year from date of installation.

Exception for capacitors on networks that be damaged by harmonic, overvoltage, overcurrent and overambient temperature refer to IEC No.60831-1, JIS C 4901

ELECTRICAL CHARACTERISTICS

Sealing test : Free from leaks at 70°C for more than 2 hours.
Dielectric withstand test : Terminals to teminals : 2.15 x rated voltage for 2-5 secs.
Terminals to container : 3,000 volts rms for 10 secs.
Capacitance (Output) : -5% to +10%
Capacitor losses : Not more than 2watt/kvar (discharge resistors included).
Maximum permissible overloads current : Not exceeding 1.3 times of the rated current.
Maximum permissible overloads voltage :

MAXIMUM PERMISSIBLE VOLTAGES vs DURATION

Voltage factor (x rated voltage)	Maximum duration
1.10	8 hours max. in every 24 hours
1.15	30 minutes max. in every 24 hours
1.20	5 minutes max. x 2 times max. in a month
1.30	1 minute max. x 2 times in a month

SAFETY FEATURES

1. Discharge device : The capacitors are provided with an internal discharge resistor which will reduce the residual voltage from the peak value to 75 volts or less within a maximum time of 3 mins after they are disconnected from the source of supply.
2. Protective : The capacitors are provided with a pressure sensitive interrupter which will, in the event of an element failure, be sensed the build-up of pressure within the capacitor and interrupt ihe internal connections, disconnect the capacitor from the circuit before rupture can occur.

INTERNAL PROTECTIVE DEVICE

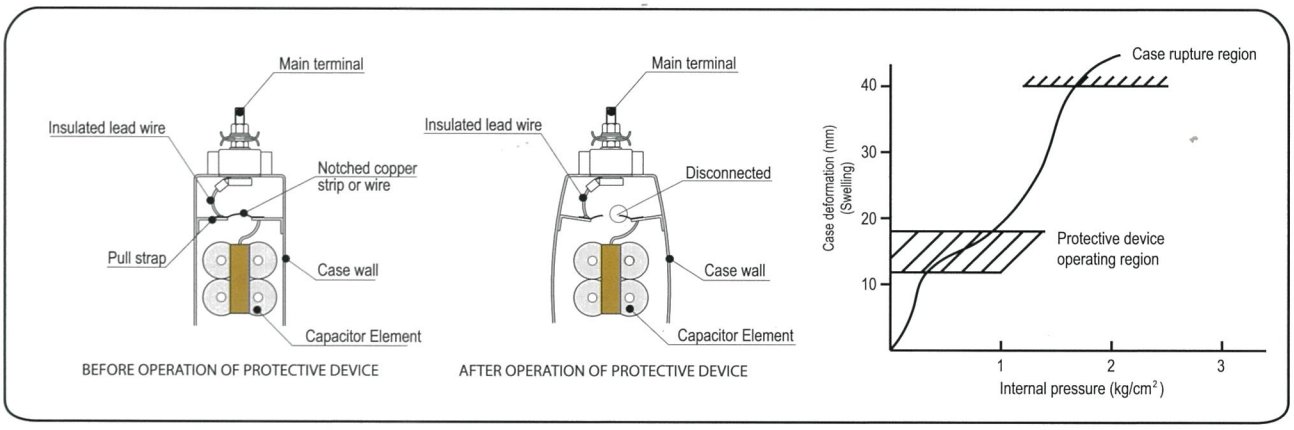

NOTE

The dimensions, characteristics and other details contained in this publication are accurate at date of issue. However, the Company reserves the right to mark, from time to time, such departure from the information contained in this publication as may be required to permit improvements in the design of its products.

TYPE RG-2 (INDOOR USE)

- **Rated Voltage Standard : 210, 230, 400, 415, 440, 525 VAC**

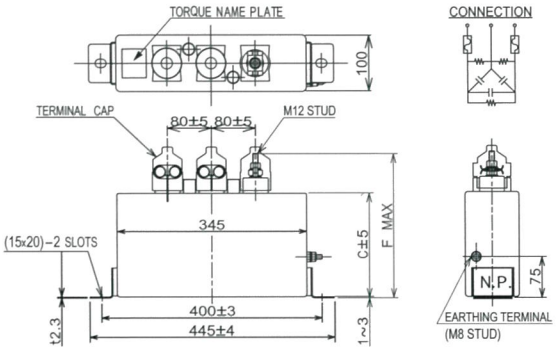

FIGURE No.1

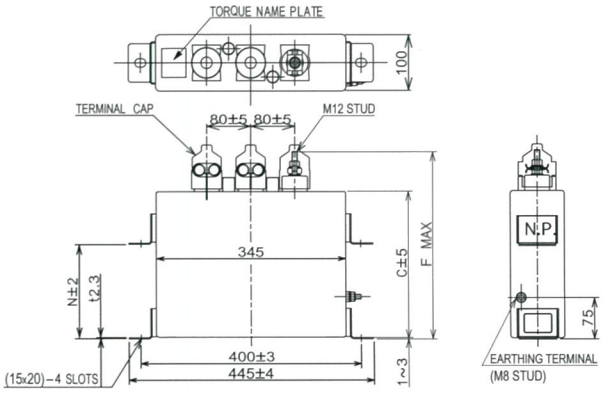

FIGURE No.2

RATING & DIMENSIONS (mm.)

NO.	CODE NO.	RATED VOLTAGE	RATED CAP.	RATED CURRENT	DIMENSION (mm.) C	DIMENSION (mm.) F	DIMENSION (mm.) N	GROSS MASS	FIGURE NO.
1	RG221020D1EA	210 V	20 kvar	55.0 A	250	340	153	15kg	2
2	RG221025D1EA		25 kvar	68.7 A	250	340	153	15kg	2
3	RG221030D1EA		30 kvar	82.5 A	290	380	193	17kg	2
4	RG221040D1EA		40 kvar	110.0 A	420	510	323	23kg	2
5	RG221050D1EA		50 kvar	137.5 A	510	600	413	27kg	2
1	RG223020D1EA	230 V	20 kvar	50.2 A	250	340	153	15kg	2
2	RG223025D1EA		25 kvar	62.8 A	250	340	153	15kg	2
3	RG223030D1EA		30 kvar	75.3 A	290	380	193	17kg	2
4	RG223040D1EA		40 kvar	100 A	360	450	263	20kg	2
5	RG223050D1EA		50 kvar	125 A	420	510	323	23kg	2
1	RG240020D1EA	400 V	20 kvar	28.9 A	160	250	-	11kg	1
2	RG240025D1EA		25 kvar	36.1 A	210	300	-	13kg	1
3	RG240030D1EA		30 kvar	43.3 A	210	300	-	13kg	1
4	RG240040D1EA		40 kvar	57.7 A	250	340	153	15kg	2
5	RG240050D1EA		50 kvar	72.2 A	290	380	193	17kg	2
6	RG240075D1EA		75 kvar	108 A	420	510	323	23kg	2
7	RG240010E1EA		100 kvar	144 A	510	600	413	27kg	2
1	RG241520D1EA	415 V	20 kvar	27.8 A	160	250	-	11kg	1
2	RG241525D1EA		25 kvar	34.8 A	210	300	-	13kg	1
3	RG241530D1EA		30 kvar	41.7 A	210	300	-	13kg	1
4	RG241540D1EA		40 kvar	55.6 A	250	340	153	15kg	2
5	RG241550D1EA		50 kvar	69.6 A	290	380	193	17kg	2
6	RG241575D1EA		75 kvar	104 A	420	510	323	23kg	2
7	RG241510E1EA		100 kvar	139 A	510	600	413	27kg	2

NO.	CODE NO.	RATED VOLTAGE	RATED CAP.	RATED CURRENT	DIMENSION (mm.) C	DIMENSION (mm.) F	DIMENSION (mm.) N	GROSS MASS	FIGURE NO.
1	RG244020D1EA	440 V	20 kvar	26.2 A	160	250	-	11kg	1
2	RG244025D1EA		25 kvar	32.8 A	210	300	-	13kg	1
3	RG244030D1EA		30 kvar	39.4 A	210	300	-	13kg	1
4	RG244040D1EA		40 kvar	52.5 A	250	340	153	15kg	2
5	RG244050D1EA		50 kvar	65.6 A	290	380	193	17kg	2
6	RG244075D1EA		75 kvar	98.4 A	420	510	323	23kg	2
7	RG244010E1EA		100 kvar	131 A	510	600	413	27kg	2
1	RG252520D1EA	525 V	20 kvar	22.0 A	210	300	-	13kg	1
2	RG252525D1EA		25 kvar	27.5 A	210	300	-	13kg	1
3	RG252530D1EA		30 kvar	33.0 A	210	300	-	13kg	1
4	RG252540D1EA		40 kvar	44.0 A	250	340	153	15kg	2
5	RG252550D1EA		50 kvar	55.0 A	290	380	193	17kg	2
6	RG252560D1EA		60 kvar	66.0 A	360	450	263	20kg	2
7	RG252575D1EA		75 kvar	82.5 A	360	450	263	20kg	2
8	RG252580D1EA		80 kvar	88.0 A	420	510	323	23kg	2
9	RG252585D1EA		85 kvar	93.5 A	420	510	323	23kg	2
10	RG252590D1EA		90 kvar	99.0 A	510	600	413	27kg	2
11	RG252510E1EA		100 kvar	110 A	510	600	413	27kg	2
12	RG252512E1EA		120 kvar	132 A	510	600	413	27kg	2

****Capacitors at other rates are also available. Please contact for more detail.****

TYPE RG-2 (INDOOR USE)

- **For System Voltage : 230VAC and 400VAC**
- **Capacitor Rated Voltages with Series Reactor L=6% : 245VAC and 426VAC**

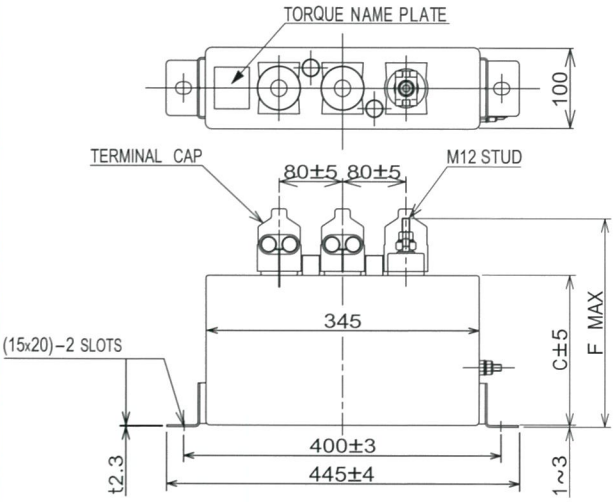

FIGURE No.1

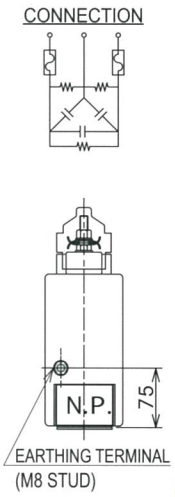

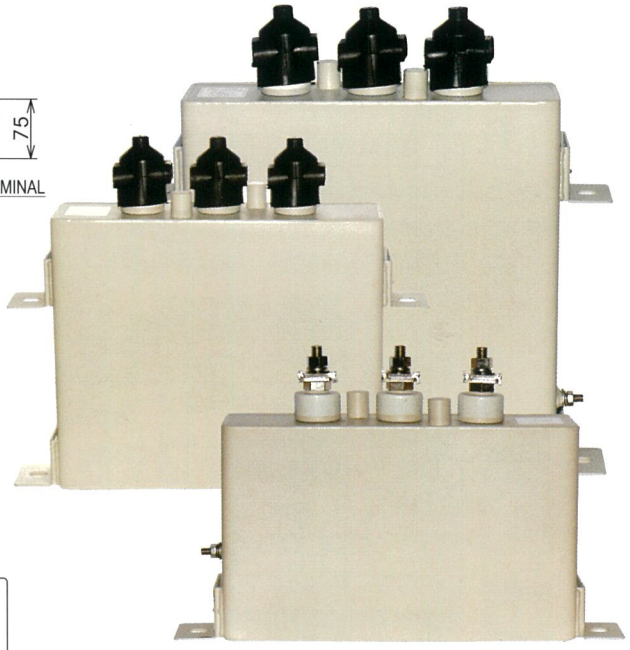

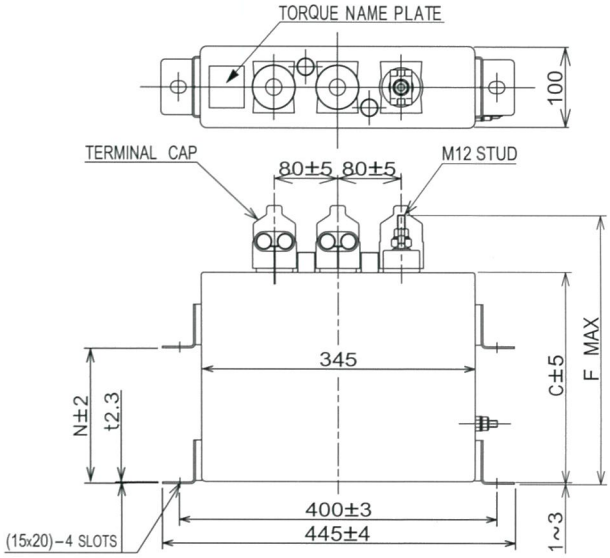

FIGURE No.2

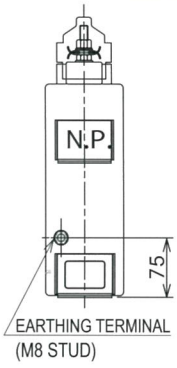

RATING & DIMENSIONS (mm.)

For system Voltage 230VAC

NO.	CODE NO.	RATED VOLTAGE	RATED CAP.	RATED CURRENT	DIMENSION (mm.) C	DIMENSION (mm.) F	DIMENSION (mm.) N	GROSS MASS	FIGURE NO.
1	RG224521D1EA	245 V	21.3 kvar	50.2A	250	340	153	15kg	2
2	RG224527D1EA		26.6 kvar	62.7A	250	340	153	15kg	2
3	RG224532D1EA		31.9 kvar	75.2A	290	380	193	17kg	2
4	RG224543D1EA		42.6 kvar	100A	420	510	323	23kg	2
5	RG224553D1EA		53.2 kvar	125A	510	600	413	27kg	2

For system Voltage 400VAC

NO.	CODE NO.	RATED VOLTAGE	RATED CAP.	RATED CURRENT	DIMENSION (mm.) C	DIMENSION (mm.) F	DIMENSION (mm.) N	GROSS MASS	FIGURE NO.
1	RG242621D1EA	426 V	21.3 kvar	28.9A	160	250	-	11kg	1
2	RG242627D1EA		26.6 kvar	36.1A	210	300	-	13kg	1
3	RG242632D1EA		31.9 kvar	43.2A	210	300	-	13kg	1
4	RG242643D1EA		42.6 kvar	57.7A	250	340	153	15kg	2
5	RG242653D1EA		53.2 kvar	72.1A	290	380	193	17kg	2
6	RG242680D1EA		79.8 kvar	108A	420	510	323	23kg	2
7	RG242611E1EA		106.4 kvar	144A	510	600	413	27kg	2

****Capacitors with series reactor L=6% at other rates are also available. Please contact for more detail.****

TYPE RG-2 (INDOOR USE)

- **For System Voltage : 230VAC and 400VAC**
- **Capacitor Rated Voltages : 264VAC and 460VAC**
  with Series Reactor L=13%

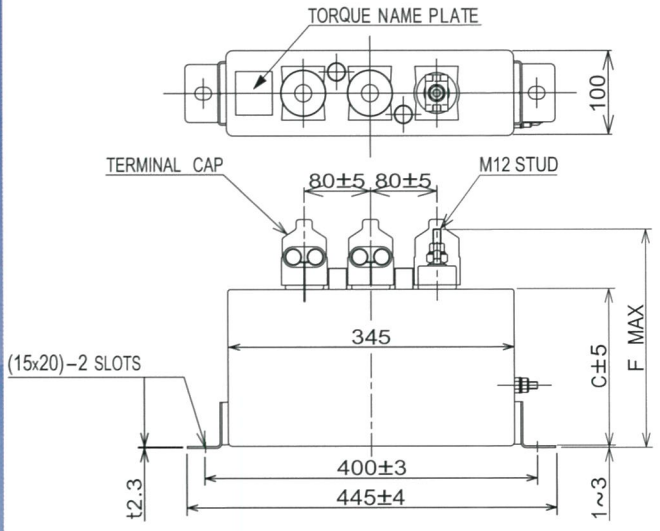

FIGURE No.1

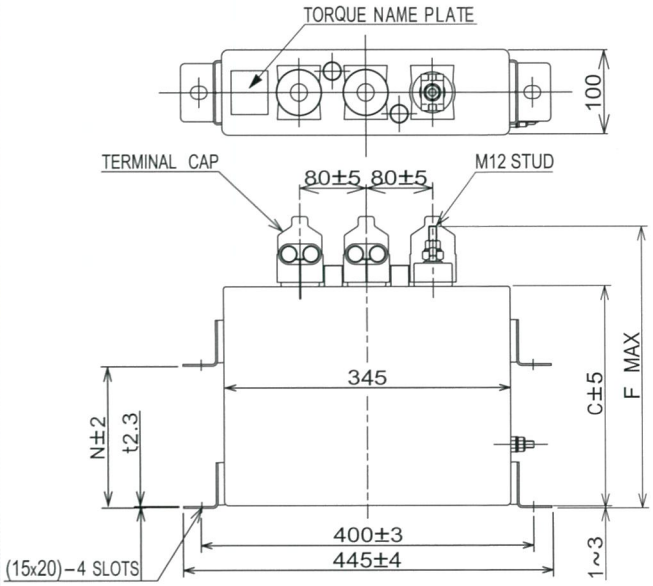

FIGURE No.2

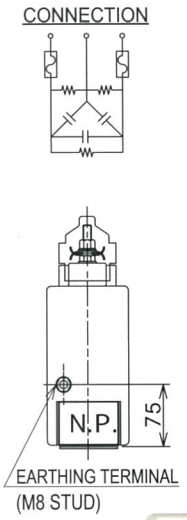

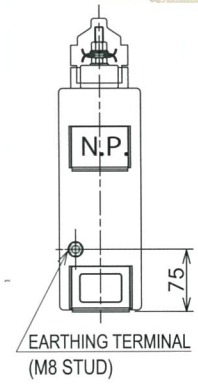

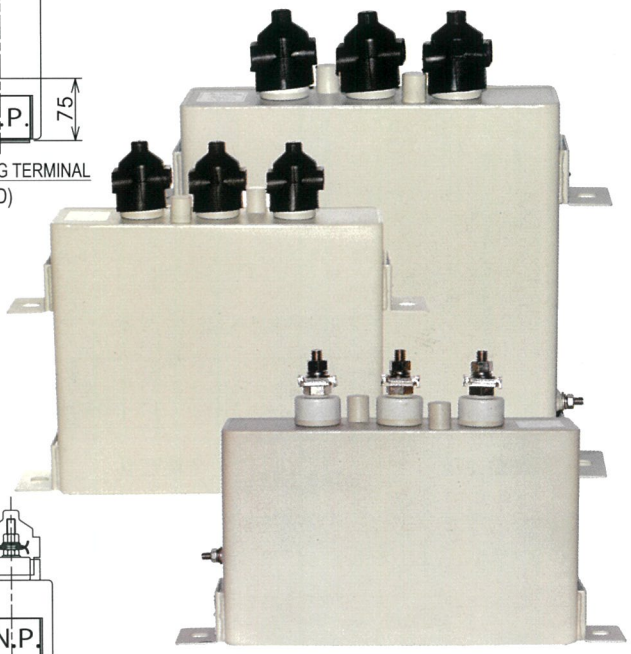

RATING & DIMENSIONS (mm.)

For system voltage 230VAC

NO.	CODE NO.	RATED VOLTAGE	RATED CAP.	RATED CURRENT	DIMENSION (mm.) C	DIMENSION (mm.) F	DIMENSION (mm.) N	GROSS MASS	FIGURE NO.
1	RG226423D1EA	264 V	23.0 kvar	50.3 A	250	340	153	15kg	2
2	RG226429D1EA		28.7 kvar	62.8 A	250	340	153	15kg	2
3	RG226435D1EA		34.5 kvar	75.5 A	290	380	193	17kg	2
4	RG226446D1EA		46.0 kvar	101 A	420	510	323	23kg	2
5	RG226458D1EA		57.5 kvar	126 A	510	600	413	27kg	2

For system voltage 400VAC

NO.	CODE NO.	RATED VOLTAGE	RATED CAP.	RATED CURRENT	DIMENSION (mm.) C	DIMENSION (mm.) F	DIMENSION (mm.) N	GROSS MASS	FIGURE NO.
1	RG246029D1EA	460 V	28.7 kvar	36.0 A	210	300	-	13kg	1
2	RG246035D1EA		34.5 kvar	43.3 A	250	340	153	15kg	2
3	RG246046D1EA		46.0 kvar	57.7 A	250	340	153	15kg	2
4	RG246058D1EA		57.5 kvar	72.2 A	290	380	193	17kg	2
5	RG246086D1EA		86.2 kvar	108 A	420	510	323	23kg	2
6	RG246012D1EA		115 kvar	144 A	510	600	413	27kg	2

****CAPACITORS WITH SERIES REACTOR L=13% AT OTHER RATES ARE ALSO AVAILABLE. PLEASE CONTACT FOR MORE DETAIL.****

LOW VOLTAGE SERIES REACTOR

TYPE LRB-3 (DRY TYPE INDOOR USE)

****SOLVE YOUR HARMONICS PROBLEM WITH SHIZUKI SERIES REACTOR ...**

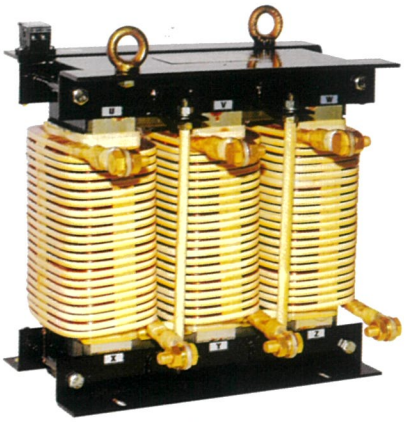

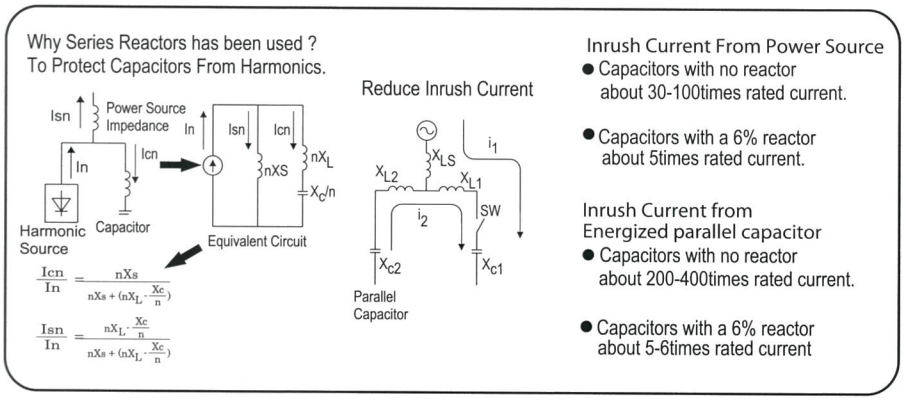

ELECTRICAL CHARACTERISTICS

1. Output tolerance : -5% to +10%
2. Withstand voltage test : Between terminals connected together and core and between terminals. 3k volts, 1 min.
3. Maximum permissible current :
   - 3.1 I_5=55% : Shall be 130% of the rated current. If the 5th harmonic is contained, it is defined as a rms value of the resultant current with the 5th harmonic current not exceeding 55% of the fundamental current.
   - 3.2 I_5=35% : Shall be 120% of the rated current. If the 5th harmonic is contained, it is defined as a rms value of the resultant current with the 5th harmonic current not exceeding 35% of the fundamental current.
4. Maximum permissible momentary current : Shall be 25 times the rated current for 2 secs. Reactor shall not have thermal or mechanical damages when subjected to the above current.
5. Temperature rise :
   - 5.1 I_5=55% : The temperature of the winding, when it has reached a constant value after 155% of the rated current is applied continually at the rated frequency. Shall not exceed 85ºC.
   - 5.2 I_5=35% : The temperature of the winding, when it has reached a constant value after 125% of the rated current is applied continually at the rated frequency. Shall not exceed 85ºC.
6. Thermal sensor : Temp. setting 125ºC, contact normally close, 250V 7.2Amp.

APPLICABLE STANDARD

The reactors are designed, manufactured and tested to meet the requirements of the latest standard IEC 60289, JIS C 4901

TYPE AND RATINGS

1. Type	: LRB-3
2. System voltage	: 230, 400VAC
3. Rated frequency	: 50 Hz.
4. Number of phase	: Three phase
5. Insulation class	: F (155ºC)
6. Reactance	: 6%, 13%

OPERATING CONDITIONS

1. Installation	: Indoor use
2. Ambient temp.	: 24h average : +45ºC max Annual average : +35ºC max
3. Relative humidity	: Not more than 85%
4. Altitude	: Not exceeding 2,000 meters above sea level.

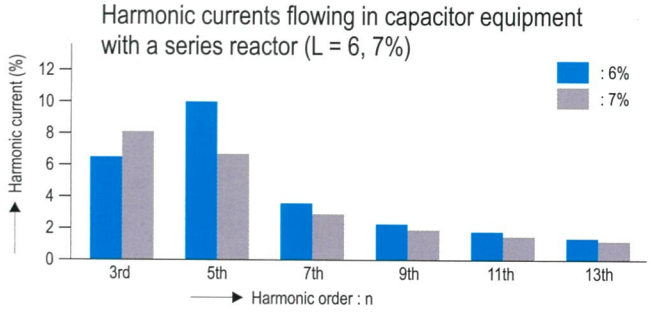

Note that a 6% reactor draws the 5th harmonic current more than a 7% reactor doses.

LOW VOLTAGE SERIES REACTOR TYPE LRB-3 (DRY TYPE INDOOR USE)

**SOLVE YOUR HARMONICS PROBLEM WITH SHIZUKI SERIES REACTOR ...

TYPE AND RATINGS

1. Type : LRB-3
2. System voltage : 230, 400VAC
3. Rated frequency : 50 Hz.
4. Number of phase : Three phase
5. Insulation class : F (155ºC)
6. Reactance : 6%, I5=55%

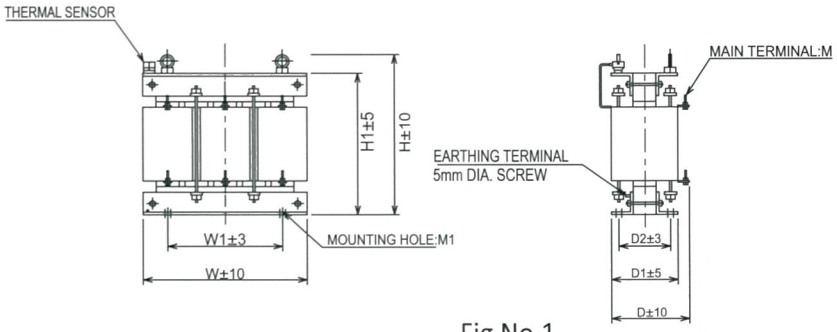

Fig No.1

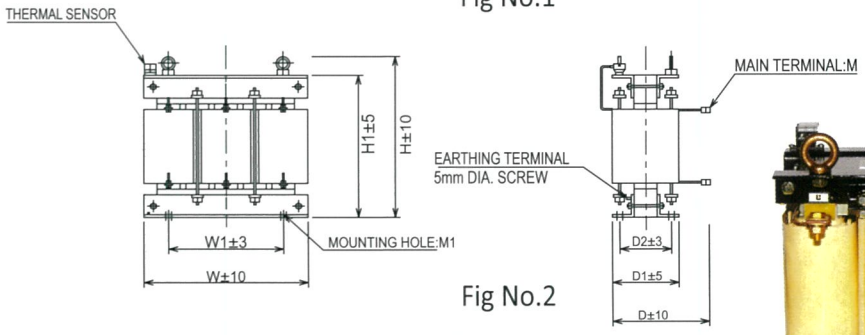

Fig No.2

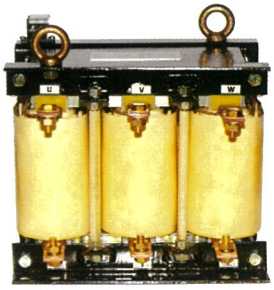

FIG NO.1

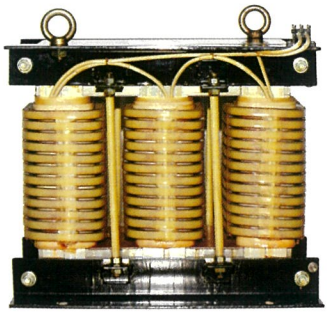

FIG NO.2

RATING AND DIMENSION (L = 6%) FOR RG-2 CAPACITOR 245VAC

NO.	SYSTEM VOLT.	CAP. VOLT.	EQUIPMENT OUTPUT	CAPACITOR OUTPUT	REACTOR OUTPUT	PART NO.	DIMENSION (mm.)							M (mm.)	M1 (mm.)	GROSS MASS	FIG NO.
							W	W1	H	H1	D	D1	D2				
1	230 V	245 V	20 kvar	21.3 kvar	1.28 kvar	LRB23B5020N26	240	160	290	245	185	150	120	M8	8	31kg	2
2			25 kvar	26.6 kvar	1.60 kvar	LRB23B5025N26	240	160	290	245	190	150	120	M10	8	32kg	2
3			30 kvar	31.9 kvar	1.91 kvar	LRB23B5030N26	240	160	290	245	205	160	130	M10	8	37kg	2
4			40 kvar	42.6 kvar	2.55 kvar	LRB23B5040N26	300	200	350	305	235	190	150	M10	8	56kg	2
5			50 kvar	53.2 kvar	3.19 kvar	LRB23B5050N26	300	200	350	305	240	190	150	M10	8	60kg	2

RATING AND DIMENSION (L = 6%) FOR RG-2 CAPACITOR 426VAC

NO.	SYSTEM VOLT.	CAP. VOLT.	EQUIPMENT OUTPUT	CAPACITOR OUTPUT	REACTOR OUTPUT	PART NO.	DIMENSION (mm.)							M (mm.)	M1 (mm.)	GROSS MASS	FIG NO.
							W	W1	H	H1	D	D1	D2				
1	400 V	426 V	20 kvar	21.3 kvar	1.28 kvar	LRB40B5020N26	240	160	245	200	200	160	130	M8	8	31kg	1
2			25 kvar	26.6 kvar	1.60 kvar	LRB40B5025N26	240	160	290	245	210	165	135	M8	8	38kg	1
3			30 kvar	31.9 kvar	1.91 kvar	LRB40B5030N26	240	160	290	245	240	195	165	M8	8	47kg	1
4			40 kvar	42.6 kvar	2.55 kvar	LRB40B5040N26	300	200	350	305	215	175	135	M10	8	52kg	2
5			50 kvar	53.2 kvar	3.19 kvar	LRB40B5050N26	300	200	350	305	225	185	145	M10	8	52kg	2
6			75 kvar	79.8 kvar	4.79 kvar	LRB40B5075N26	300	200	350	305	265	215	175	M10	8	68kg	2
7			100 kvar	106 kvar	6.38 kvar	LRB40B5100N26	360	240	350	305	290	235	185	M12	10	85kg	2

REACTANCE : L=6%

System Voltage : 230, 400 VAC and other rated system voltages are also available. Please contact for more details.

LOW VOLTAGE SERIES REACTOR TYPE LRB-3 (DRY TYPE INDOOR USE)

**SOLVE YOUR HARMONICS PROBLEM WITH SHIZUKI SERIES REACTOR ...

TYPE AND RATINGS

1. Type : LRB-3
2. System voltage : 230, 400VAC
3. Rated frequency : 50 Hz.
4. Number of phase : Three phase
5. Insulation class : F (155ºC)
6. Reactance : 13%, I5=35%

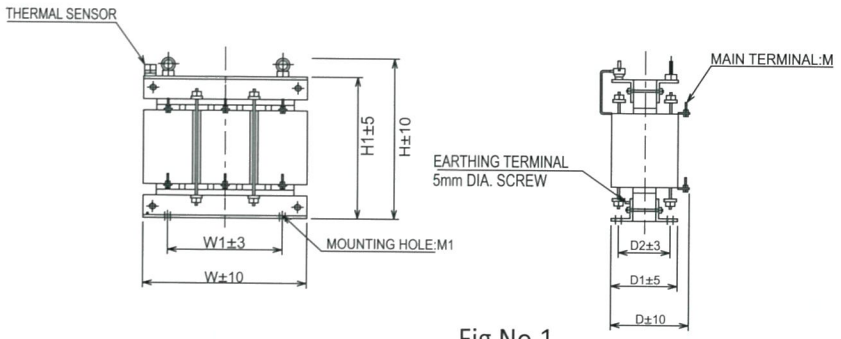

Fig No.1

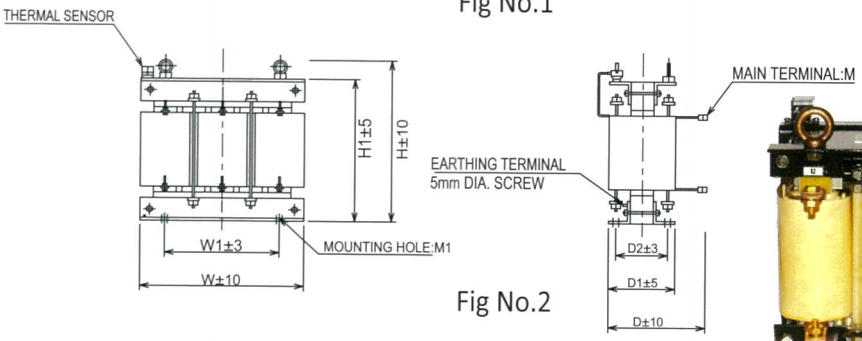

Fig No.2

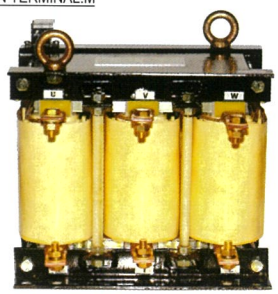

FIG NO.1

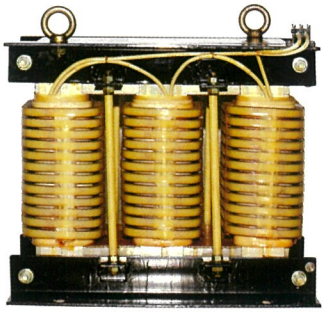

FIG NO.2

RATING AND DIMENSION (L = 13%) FOR RG-2 CAPACITOR 264VAC

NO.	SYSTEM VOLT.	CAP. VOLT.	EQUIPMENT OUTPUT	CAPACITOR OUTPUT	REACTOR OUTPUT	PART NO.	DIMENSION (mm.)							M (mm.)	M1 (mm.)	GROSS MASS	FIG NO.
							W	W1	H	H1	D	D1	D2				
1	230 V	264 V	20 kvar	23.0 kvar	2.99 kvar	LRB23B5020N13	300	200	350	305	205	160	120	M8	8	46kg	1
2			25 kvar	28.7 kvar	3.74 kvar	LRB23B5025N13	300	200	350	305	215	180	140	M10	8	53kg	2
3			30 kvar	34.5 kvar	4.48 kvar	LRB23B5030N13	300	200	350	305	225	185	145	M10	8	57kg	2
4			40 kvar	46.0 kvar	5.98 kvar	LRB23B5040N13	360	240	410	365	230	175	135	M10	10	70kg	2
5			50 kvar	57.5 kvar	7.47 kvar	LRB23B5050N13	360	240	410	365	240	175	135	M10	10	75kg	2

RATING AND DIMENSION (L = 13%) FOR RG-2 CAPACITOR 460VAC

NO.	SYSTEM VOLT.	CAP. VOLT.	EQUIPMENT OUTPUT	CAPACITOR OUTPUT	REACTOR OUTPUT	PART NO.	DIMENSION (mm.)							M (mm.)	M1 (mm.)	GROSS MASS	FIG NO.
							W	W1	H	H1	D	D1	D2				
1	400 V	460 V	25 kvar	28.7 kvar	3.74 kvar	LRB40B5025N13	300	200	350	305	235	190	150	M8	8	58kg	1
2			30 kvar	34.5 kvar	4.48 kvar	LRB40B5030N13	300	200	350	305	245	200	160	M8	8	65kg	1
3			40 kvar	46.0 kvar	5.98 kvar	LRB40B5040N13	300	200	410	365	255	215	165	M8	10	78kg	2
4			50 kvar	57.5 kvar	7.47 kvar	LRB40B5050N13	300	200	410	365	260	220	170	M10	10	85kg	2
5			75 kvar	86.2 kvar	11.2 kvar	LRB40B5075N13	330	220	470	425	285	240	190	M10	10	126kg	2
6			100 kvar	115 kvar	14.9 kvar	LRB40B5100N13	390	260	535	490	240	185	145	M10	10	140kg	2

Reactance : L=13%

System Voltage : 230, 400 VAC and other rated system voltages are also available. Please contact for more details.

AUTOMATIC POWER FACTOR CONTROLLER

AUTOMATIC POWER FACTOR CONTROLLER Type Q-AUTOMAT/V MS-6Q & MS-12Q

HAS ENHANCED RELIABILITY DUE TO BUILT-IN MICROPROCESSOR! MAINTAINING HIGH POWER FACTOR TO SAVE ENERGY

■ FEATURES

1. Capable of automatic control in 6 steps (MS-6Q) or 12 steps (S-12Q).
2. Compact size and enhanced reliability enabled by built-in microprocessor.
3. Capacitor closing and opening time (5~600s/step) can be selected.
4. Capacitor reclosing time (5~240s) can be selected.
5. Four control modes (Manual, Rotation, Automatic and Four-quadrant) can be selected.
6. Capable of indicating power factor, current and total harmonic distortion.
7. Can automatically measure C/K value.
8. Capable of setting target power factor (lag 0.8~lead 0.8).
9. Capable of setting alarms (Voltage, Current and harmonic).

■ SPECIFICATION

Auxiliary Supply		Control Range	
Supply voltage (L-L)	200~240VAC or 380~415VAC	Power factor setting	0.8 inductive - 0.8 capacitive
Operating limits	-15% + 10%	C/K setting	0.03 - 1.20 / AtC
Consumption	10VA max.	Switching sensitivity	5-600s / step
Frequency	50Hz or 60Hz	Reconnection time for same step	5-240s
Current Input		THD threshold	0.20 - 3.00 (20% - 300%)/ OFF
Rated current, I_n	5A	Switching program	Automatic / Automatic Rotate / Manual / Four-quadrant
Operating limits	0.05A - 6.5A	Rated step coefficent	1/2/3/4/5/6/8/12/16
Relay Output		**Temperature**	
Number of outputs	6/12	Operating temperature	0 ~ +55°C
Contact arrangement	NO contact type	**Mechanical**	
Rated capacity	5A 250VAC (Cos θ = 1)	Mounting	Panel mounting
Max current for the Common terminals	12A continuous	Dimension (h X w X d)	144mm X 144mm X 91mm
		Approximate weight	1 kg

■ MODEL

	Model	Step	Supply Voltage (V) (L-L)	Frequency (Hz)
1	MS-6Q-240-50	6	200-240	50
2	MS-6Q-240-60	6		60
3	MS-12Q-240-50	12	200-240	50
4	MS-12Q-240-60	12		60

	Model	Step	Supply Voltage (V) (L-L)	Frequency (Hz)
5	MS-6Q-415-50	6	380-415	50
6	MS-6Q-415-60	6		60
7	MS-12Q-415-50	12	380-415	50
8	MS-12Q-415-60	12		60

■ DIMENSION (in mm.)

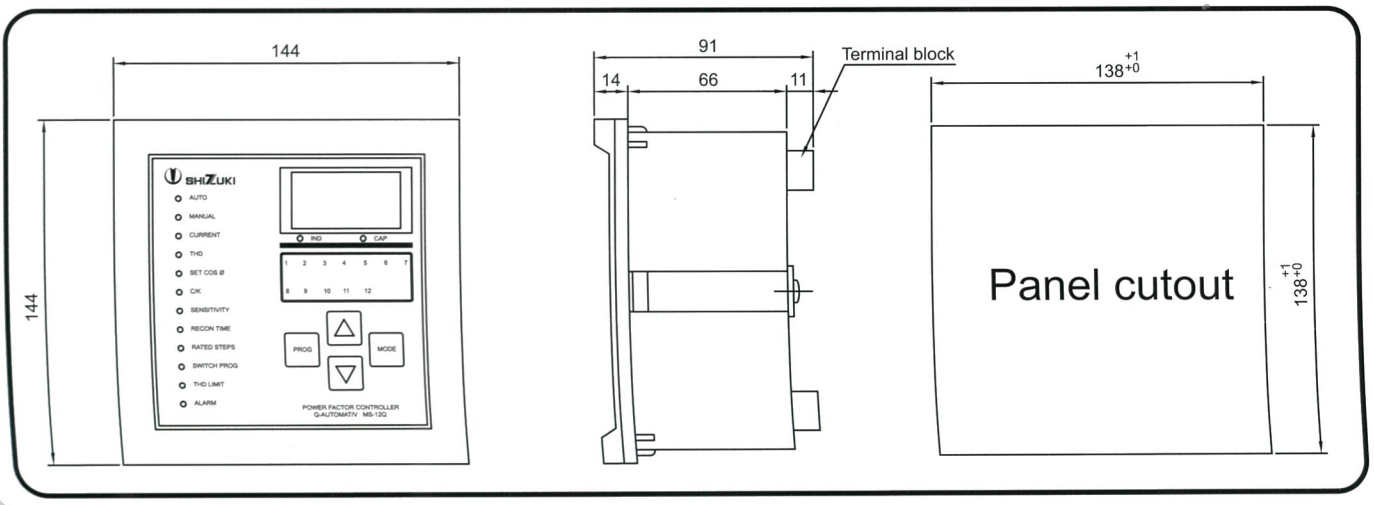

SELECTION OF CAPACITOR OUTPUT (kvar)

Multiplier (kθ) to calculate capacitor output

P.F. before corrected (cosθ 1)	P.F. after corrected (cosθ 2)																			
	1.00	0.99	0.98	0.97	0.96	0.95	0.94	0.93	0.92	0.91	0.90	0.85	0.80	0.75	0.70	0.65	0.60	0.55	0.50	0.45
0.40	2.29	2.15	2.09	2.04	2.00	1.96	1.93	1.90	1.87	1.84	1.81	1.67	1.54	1.41	1.27	1.12	0.96	0.77	0.56	0.31
0.45	1.99	1.84	1.78	1.73	1.69	1.88	1.62	1.59	1.56	1.53	1.50	1.37	1.24	1.10	0.97	0.82	0.65	0.47	0.25	
0.50	1.73	1.59	1.53	1.48	1.44	1.40	1.37	1.34	1.31	1.28	1.25	1.11	0.98	0.85	0.71	0.56	0.40	0.21		
0.55	1.52	1.38	1.32	1.27	1.23	1.19	1.16	1.12	1.09	1.06	1.04	0.90	0.77	0.64	0.50	0.35	0.19			
0.60	1.33	1.19	1.13	1.08	1.04	1.00	0.97	0.94	0.91	0.88	0.85	0.71	0.58	0.45	0.31	0.16				
0.65	1.17	1.03	0.97	0.92	0.88	0.84	0.81	0.77	0.74	0.71	0.69	0.55	0.42	0.29	0.15					
0.70	1.02	0.88	0.82	0.77	0.73	0.69	0.66	0.63	0.59	0.56	0.54	0.40	0.27	0.14						
0.75	0.88	0.74	0.68	0.63	0.59	0.55	0.52	0.49	0.46	0.43	0.40	0.26	0.13							
0.80	0.75	0.61	0.55	0.50	0.46	0.42	0.39	0.36	0.32	0.29	0.27	0.13								
0.85	0.62	0.48	0.42	0.37	0.33	0.29	0.26	0.23	0.19	0.16	0.14									
0.90	0.48	0.34	0.28	0.23	0.19	0.16	0.12	0.089	0.058	0.028										
0.91	0.46	0.31	0.25	0.21	0.16	0.13	0.093	0.061	0.030											
0.92	0.43	0.28	0.22	0.18	0.13	0.097	0.063	0.031												
0.93	0.40	0.25	0.19	0.14	0.10	0.066	0.032													
0.94	0.36	0.22	0.16	0.11	0.071	0.034														
0.95	0.33	0.19	0.13	0.078	0.037															
0.96	0.29	0.15	0.089	0.041																
0.97	0.25	0.11	0.048																	
0.98	0.20	0.06																		
0.99	0.14																			

Calculation of capacitor output

Capacitor output = Load capacity (kW) x kθ
kθ is given in the table.

Example :
For a 500kW load.
kθ to improve from cosθ 1 = 0.65 to cosθ 2
= 0.95 is 0.84

Capacitor output = 500 x 0.84
= 420 kvar

SHIZUKI

AFTER SALE SERVICE

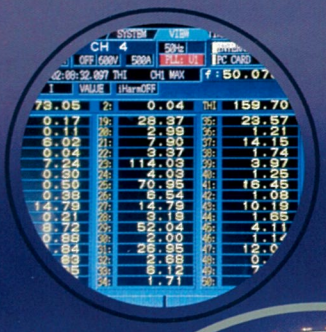

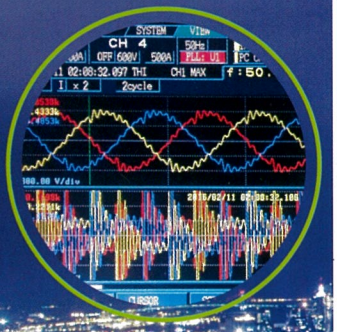

- SERVICE CONDITION
  1. Power factor improvement consult.
  2. Capacitor bank check and measurement report.
  3. Harmonic measurement report.
  4. Solution of power quality.

Tokyo Int'l Sales Office : 16-8, Hamamatsu-cho 1-chome, Minato-ku, Tokyo 105-0013, Japan
Phone : 03-5473-3911 Fax : 03-5473-3922

Bang-Chan Industrial Estate No. 111 Soi Serithai 54, T. Kannayao, A. Kannayao, Bangkok 10230 Thailand
Tel : (66) 2919-9600 Fax : (66)2919-9953 URL : http://www.shizuki.co.jp E-mail : sales@thai-shizuki.co.th

(SHIZUKI ELECTRIC (THAILAND) CO., LTD. reserves the right to change any specification without advanced notice.)

Issued : **201602**